

POTOP

GUANGZHOU POTOP CO., LTD.

POLYMER LAB & PILOT MACHINES

Fabrication • Customization • Design

MANUFACTURE STANDARD MACHINES AND PROVIDE IN-DEPTH CUSTOMIZATION SERVICES ON POLYMER LAB& PILOT SOLUTIONS (OVER 10-YEAR EXPERIENCE).

CONTACT US

GUANGZHOU POTOP CO., LTD.

Add: No.3, Kaifa Road, Jiushuikeng Village, Panyu, Guangzhou, China.

Tel ： + 86 20 39283061

Fax ： + 86 20 39283062

E-mail:potopmarket@hotmail.com

www.potop-lab.com









COMPANY PROFILE

Full company name	GUANGZHOU POTOP CO., LTD.
Year founded	2009
Business range	Design, customize, fabricate and sell polymer lab & pilot machines.
Mechanical design capability	✓
Software development/ programming capability	✓
Electronic & electrical design capability	✓
Polymer shaping and processing solutions	✓

Business philosophy

We constantly explore our industry and tap into demands from the market, amass extensive experience rooted in our field. Based on our strong R&D strength and technical advantages, we are committed to designing, customizing and fabricating the high-end polymer laboratory and pilot production machines and providing the best and most flexible services.

Technical advantages

POTOP has deep knowledge in mechanical engineering, polymer shaping and processing. Combined with automation, electrical and electronic technologies, software development and programming, POTOP designs and fabricates high-end polymer lab & pilot machines for high-performance standard, and even with the ability to provide customers with non-standard polymer lab & pilot machines for specific needs. POTOP is the industrialization base for National Engineering Research Center of SCUT (The South China University of Technology) for Polymer New Forming Equipment – One of the most important organizations for polymer shaping and processing in China.

Quality control

Very strict quality control is applied to manufacturing process in POTOP factory. The machines fabricated by POTOP are fully tested to ensure they can meet high standard performance requirements. The parts used in the machines have been strictly checked, and they are purchased from highly reliable suppliers such as Siemens, Schneider, Nord and so on. We carry out a full inspection of every component of our machines, from design, purchasing to fabrication, we pay full attention to every detail to ensure our machines can meet the customer's acceptance criteria. The machines fabricated by POTOP are at the high-end level in terms of quality.

Service

POTOP insists on providing customers with the best and most flexible service. We have a professional service team with capabilities of assembly, commissioning, training and maintenance, the members of our team are always ready and available to support our customers, they travel in cities across our country and go abroad whenever our customers in other countries require.

CONTENTS

Non-Standard Machines 01-10
Torque Rheometer 11-12
Capillary Rheometer 13-14
Fitration Pressure Value Tester 15-16
Twin Screw Extrusion Granulator..... 17-18
Three Screw Extrusion Granulator..... 19-20
Tabletop Film Blowing Machine..... 21-22
Desktop Casting Machine..... 23-24
Desktop Three- roll Calender 25-26
Laminating & Coating Extrusion Test Line 27-28
Tube Extrusion Molding Experimental Line..... 29-30
MDO Stretching Machine..... 31-32
Laboratory Film Biaxial Stretching Machine..... 33-34
Small Two Roll Mill..... 35-38
Platen Vulcanizer (High Temperature)..... 39-40
Platen Vulcanizer..... 41-42
Modularized Dynamic Rheological Workstation .. 43-44

NON- STANDARD MACHINES

Customization of Non-Standard Machines by POTOP

Years of customization experience	15
Product range of customization	Polymer lab & pilot machines.
Mechanical design capability	✓
Software development/ programming capability	✓
Electronic & electrical design capability	✓
Polymer shaping and processing solutions	✓

Successful Cases

The following non-standard machines introduced were customized by POTOP for some listed companies, state-owned enterprises, Fortune Global 500 companies, research institutes and universities.



01

Complete Set of Lab and Pilot Production Machine for Lithium Battery Separators

By thermal induced phase separation (TIPS) process, the whole set machine is for production and preparation of lithium battery separators and realizes the mixing and extrusion, tape casting, biaxial stretching, and extraction stereotypes, secondary stretching and automatic winding in processing the polymer materials.



02

Supercritical Foaming Extrusion Machine & Multi - functional Polymer Extrusion and Processing Machine

For major scientific research project from Shanghai Institute of Organic Chemistry, Chinese Academy of Sciences. Applied to exploration and verification in supercritical carbon dioxide foaming extrusion process, casting and longitudinal stretching process, melt plasticizing extrusion of ultra high molecular weight polyethylene, and also can be applied to extrusion film tensile test of other high temperature materials.





03

Single-screw Silicone Rubber Extrusion and Calendering Production Line

Mainly consists of a single screw rubber extruder, a set of sheet forming molds, a three - roll calendering compound machine, and an infrared drying system. The materials are first melted by a single- screw rubber extruder, homogenized and transported to a die for extrusion, and go through three- roll calendering and dried by the infrared drying system to produce products. This line is ideal for high precision and high stroke sheet forming.



04

Tri-screw Granulation Experimental Line

A new type of high- e ciency continuous compounding equipment with proprietary intellectual property rights, which can achieve high- yield extrusion . It adopts concurrent parallelism tri-screw structure to achieve the mixing e ect that the traditional twin-screw extruder can achieve at a large L/D ratio under the condition of a smaller L/D ratio. It has unique advantages of high filling, high dispersion, high output and low energy consumption. It can be widely used in plastic blending modification, filling modification, additive dispersion, fiber reinforcement, blending reaction, polymerization reaction, exhaust

05

Hollow Fiber Reverse Osmosis Membrane Experimental Line

POTOP was commissioned by Tianjin Institute of Seawater Desalination, State Oceanic Administration to design and fabricate the line, including Perfluoro hollow fiber membrane experimental system and desktop mixed matrix hollow fiber reverse osmosis membrane production system. Via the Perfluoro hollow fiber membrane experimental system, the perfluoro hollow fiber membrane with an outer diameter of 0.5 mm to 3 mm can be produced and prepared to meet the need for long life and corrosion resistance of the membrane material in seawater desalination.





06

High Temperature MDO Stretching Machine

Preparation of PEEK film and PAR film for the production and processing of electronic components and electro- acoustic devices etc. The structure of this machine is horizontal, easy to expand and to lead film. It can achieve double - point (even multi -point) stretching. The performance of film produced is excellent by this machine.

07

Extrusion Laminating Machine

1100 extrusion laminating machine, the whole machine is designed and fabricated according to the standard for US market. Applicable non-woven fabric thickness is 15-150gsm, coating thickness is 40-70gsm. The machine is suitable for the raw materials such as PP, PE, EVA. The extruder is movable to meet the di erent coating width requirements. Equipped with precision metering pump and extrusion die to ensure the quality of the coating. In addition, the non-woven fabric rewinding and unwinding system is equipped with high sensitive tension detector, automatic roll change and correction system and fabric static elimination device.



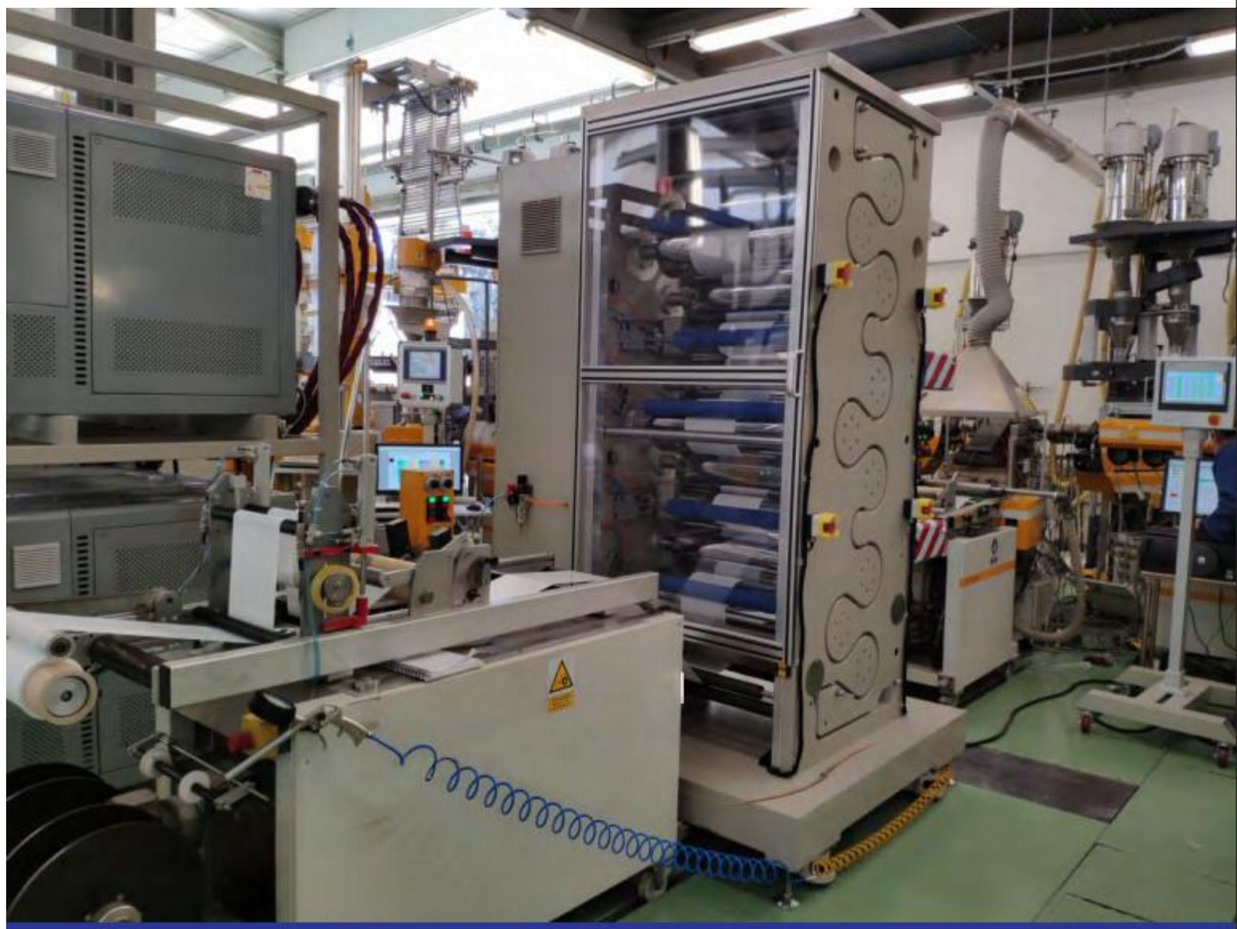

08

MDO Two-point Stretching Machine

MDO process can greatly improve the performance of the film, such as film barrier, sti ness, flatness, tensile strength and openness. This machine can be operated online or o ine, can provide two stretching points, which has a wider process range, a larger stretching ratio and a better product e ect than a single stretching point . At the same stretching ratio, a better performance of film can be obtained by two-point stretching. Each roller is independently driven by a servo motor and the roller speed is stable. Optimized roller runner design ensures uniform roll

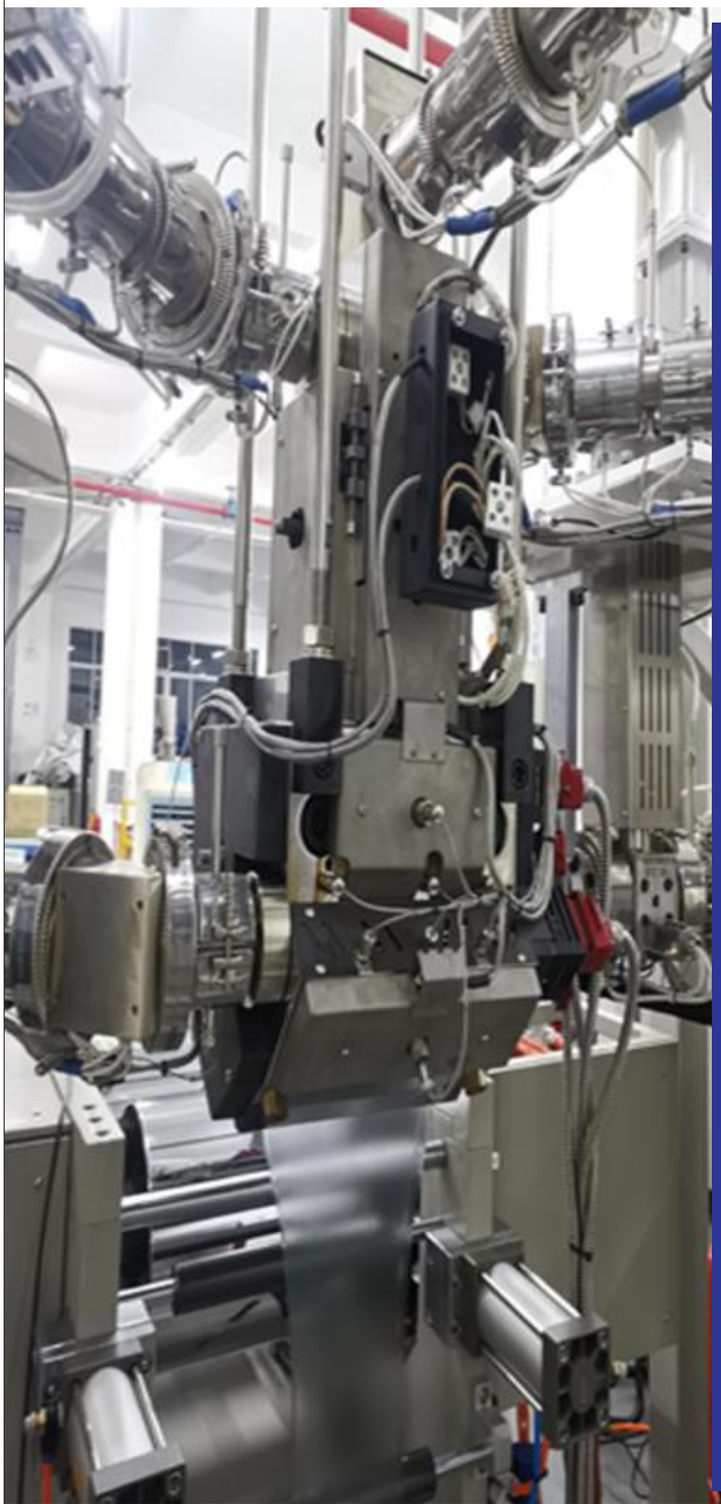

09

Precision Seven-layer In-mold Coextrusion Test Line

For new product development and formulation optimization,production process optimization and production quality control etc., the line can be used to test and process a variety of materials such as plastics , elastomers, etc., and automatically and accurately measurethe important signals such as melt pressure and temperature during the extrusion process.

10

1.5 Screw Coextrusion Compound Calendering Experimental Line

The material is delivered by the rotary motion of the main screw to realize the feeding and conveying of special materials to solve the problem of di culty in feeding these materials or getting stuck. It is suitable for special materials such as low viscosity liquid, high viscosity solid, elastomer, light flu y and irregular shape materials, and foaming extrusion of



Torque Rheometer



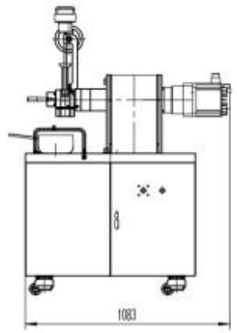

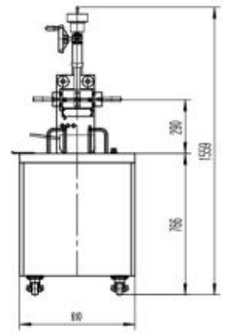

FEATURES

- High-strength European standard integrated frame, 304 stainless steel desktop with aesthetic design.
- Non-contact dynamic torque sensor for high accuracy and good repeatability.
- Building block structure design, the mixing chamber and rotor can be flexibly disassembled and assembled, easy for cleaning.
- The mixing chamber and rotor are made of high performance corrosion-resistant and wear-resistant materials.
- High-performance servo motor with wide speed range, the speed is highly stable.
- Special software based on LABVIEW is powerful and human-computer interactive.
- High torque and temperature measurement accuracy, sensitive to subtle di erences in formulation.
- Humanized structure design, more convenient to operate.

APPLICATION

- Polymer material formulation design.
- Raw material performance and quality inspection.
- PVC melting characteristics test.
- Test for plasticizer absorption performance of PVC dry mix.
- Thermal and shear stability testing of thermoplastic materials.
- Cross-linking characteristics determination for XLPE cross-linked ethylene .
- Studying flow and solidification behavior of cross-linking polymers.
- Formulation design of inorganic powder sintering molding materials such as metal and ceramics.

PERFORMANCE SPECIFICATION

Model	RT0I-55/03
Applicable materials	Universal plastics and rubbers
Mixing chamber volume	55mL
Rotating speed	0-190rpm
Rotor speed ratio	2:3
Rotor	Equipped with Roller (Options:Banbury 、Cam、Sigma、Delte)
Torque measurement range	0-200Nm
Torque measurement accuracy	0.5%F.S
Heating/cooling method	Electric Heating/ Compressed air cooling
Operating temperature	Room temperature-350°C
Temperature control accuracy	±1°C
Main motor power	3kW
Control	SIEMENS PLC
Working voltage	Three-phase 380VAC±10%,single-phase 220VAC±10%,50Hz
Rated power	Approx.4.5kW
L x W x H	1085mm×610mm×1560mm
Weight	Approx.300kg

Standard Machines

Capillary Rheometer



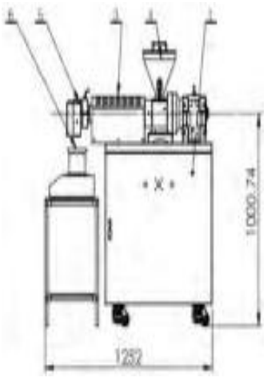

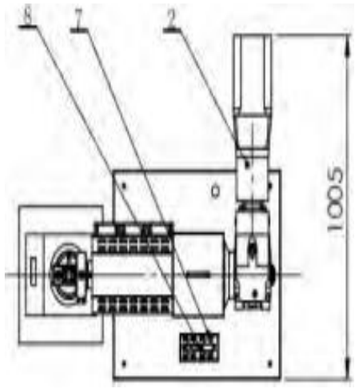

FEATURES

- High-strength European standard integrated frame, 304 stainless steel desktop with aesthetic design.
- GEFRAN melt pressure sensor to ensure accurate test data.
- The capillary die can test material performance and generate viscosity curve.
- Test for the true viscosity curve of materials by optional capillary dies with di erent L/Ds.
- Optional narrow slot die to test the rheological curve of materials under special flow fiel behavior of the material.
- High-performance servo motor with wide speed range and stable speed.
- Special software based on LABVIEW is powerful and human-computer interactive.
- Humanized structure design, more convenient operation.

APPLICATION

- Test for apparent / true viscosity curve.
- Measurement and analysis of extrusion swell behavior.
- Research and development of new products and formulations.
- Optimization of production process parameters.

PERFORMANCE SPECIFICATION

Model	RCSI-20/28
Applicable materials	Universal plastics
Screw diameter	20mm
L/D	28
Screw speed	0-100rpm
Capillary die dia.	1mm、2mm
Capillary die L/D	1mm:10、20、30、40;2mm:10、20
Pressure measurement range	0-50MPa
Pressure measurement accuracy	0.5%F.S
Weight range	0-4100g
Weight accuracy	±0.1g
Heating/cooling method	Electric Heating/Fan cooling
Operating temperature	Room temperature-350°C
Temperature accuracy	±1°C
Main motor power	3kW
Control	SIEMENS PLC
Working voltage	Three-phase 380VAC±10%,Single-phase 220VAC±10%,50Hz
Rated power	Approx.9kW
L x W x H	1255mm×1005mm×1000mm
Weight	Approx.450kg

Filtration Pressure Value Tester



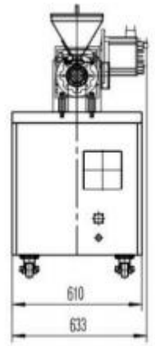

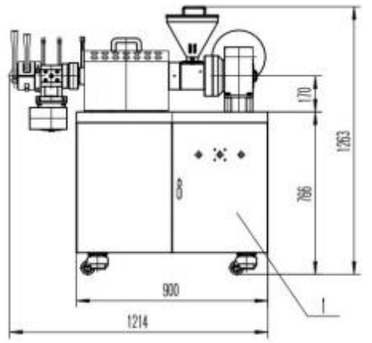

FEATURES

- High-strength European standard integrated frame, 304 stainless steel desktop with aesthetic design.
- With manual screen changer, the grid is nitrided, high-hardness and wear-resistance.
- GEFRAN melt pressure sensor to ensure accurate test data.
- High-performance servo motor with wide speed range and stable speed.
- Special software based on LABVIEW is powerful and human-computer interactive.
- Humanized structure design, more convenient operation.

APPLICATION

- Test for apparent / true viscosity curve.
- Measurement and analysis of extrusion swell behavior.
- Research and development of new products and formulations.
- Optimization of production process parameters.

PERFORMANCE SPECIFICATION

Model	CMSI-20/28
Applicable materials	PP 、PA6、PA66、PET 、PS 、PE etc
Screw diameter	20mm
L/D	28
Screw speed	0-120rpm
Melt pump rated flow	60 cm³/min(5cc)
Melt pump drive power	0.75kW
Melt pump pressure working range	Before pump:0-100bar;After pump:0-300bar
Pressure measurement	0-500bar, 0.5%F.S
Heating/cooling method	Electric heating/Fan cooling
Operating temperature	Room temperature-350°C
Temperature control accuracy	±1°C
Screen plate 1	Dual-layer, filtration layer 615×108
Screen plate 2	Dual-layer, filtration layer 615×132
Screen plate 3	Trip-layer, filtration layer 165×1400
Max.output	5kg/h
Main motor power	3kW
Control	SIEMENS PLC
Working voltage	Three-phase 380VAC±10%,Single-phase 220VAC±10%,50Hz
Rated power	Approx.12kW
L x W x W	1215mm×635mm×1265mm
Weight	Approx.450kg

Standard Machines

Twin Screw Extrusion Granulator



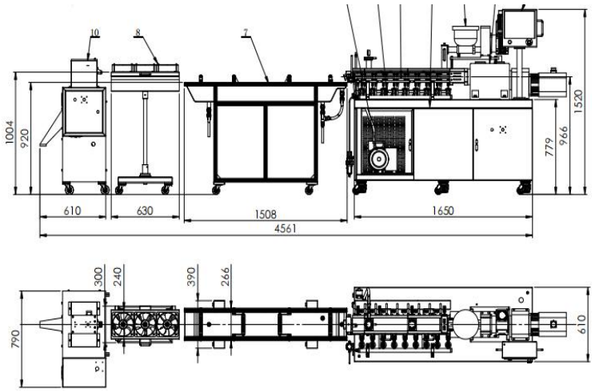

FEATURES

- Screw elements can be combined freely according to material characteristics.
- The shell adopts clamshell design, which is convenient for users to clean screw, especially suitable for frequent formula switching.
- Efficient and optimized temperature control management system provides high precision temperature control.
- Large torque servo motor drive, can provide constant torque output within the full speed range, high and low speed running free adjustment, from dozens of grams to several kilograms of capacity arbitrary use.
- Mini twin screw extruder usd PLC intelligent control, all information on the touch screen display adjustment.
- The granulator is driven by servomotor, providing powerful power and equipped with strong and sharp cutting tools.

APPLICATION

- Different kinds and brands of plastics are mixed into homogeneous plastic alloys or blends to obtain polymer materials with new comprehensive properties.
- Adding various inorganic fillers into plastics, such as calcium carbonate and talc powder, can greatly reduce the cost of raw materials and improve their physical and mechanical properties.
- Mixing various additives in plastics, such as stabilizer, flame retardant, colorant and preparation of high concentration masterbatch, can obtain highly dispersed mixing effect.

PERFORMANCE SPECIFICATION

Model	MGPL-16/40	MGPL-22/40	MGPL-35/40
Applicable materials	PLA、PVC、PE、ABS、EVA、PP、PC、TPU etc		
Screw diameter	16mm	22mm	35mm
L/D	40		
Center distance of screw	18mm		
Screw speed	600r/min		
Rated working torque of single screw	47N·m		
Rated power of main motor	2KW	7.5KW	11KW
Rated speed of main motor	1500r/min		
Maximum production capacity	2kg/h	10kg/h	20kg/h
Operating temperature	350°C		
Control	SIEMENS PLC		
Working voltage	Three-phase 380VAC±10%,Single-phase 220VAC±10%,50Hz		
L x W x H	1968mm×610mm×1600mm		

Three Screw Extrusion Granulator



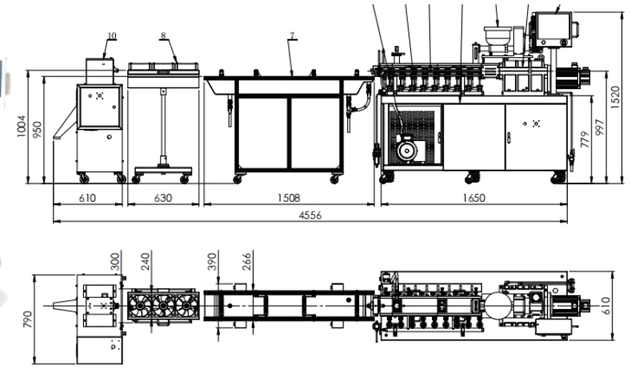

FEATURES

- High-strength European standard integrated frame, 304 stainless steel desktop with aesthetic design.
- Efficient and optimized temperature control management system provides high precision temperature control.
- Driven by large torque servo motor, it can provide constant torque output in the full speed range, and can be adjusted freely at high and low speeds.
- High-performance servo motor with wide speed range and stable speed.
- Humanized structure design, more convenient operation.

APPLICATION

- Mixing, kneading and pelletizing of general and engineering plastics, elastomer, etc.
- Polymer blending modification and reactive extrusion.
- Highly effective compounding of polymer alloy.
- Modification of filled polymer.
- Polymer dehydration, devolatilization and exhaust.

PERFORMANCE SPECIFICATION

Model	MGPL-22/40	MGPL-35/40	MGPL-50/40
Applicable materials	PE / PP / PS / ABS / PA and composite materials		
Screw diameter	22mm	35mm	50mm
L/D	40		
Screw speed	600rpm		
Number of temperature zones	9		
Rated power of screw motor	7.5kw		
Operating temperature	350°C		
Temperature control accuracy	±3°C		
Hopper capacity	5 L		
Maximum output	10kg/h		
Control	SIEMENS PLC		
Working voltage	Three-phase 380VAC±10%, Single-phase 220VAC±10%,50Hz		
L x W x H	2328mm×690mm×1655mm		
Storage temperature and humidity temperature	temperature - 25 ~ + 55 ℃ humidity: 5 ~ 95%		
Operating temperature and humidity temperature	Temperature + 5 ~ + 45 ℃ humidity: 5 ~ 95%		

Tabletop Film Blowing Machine



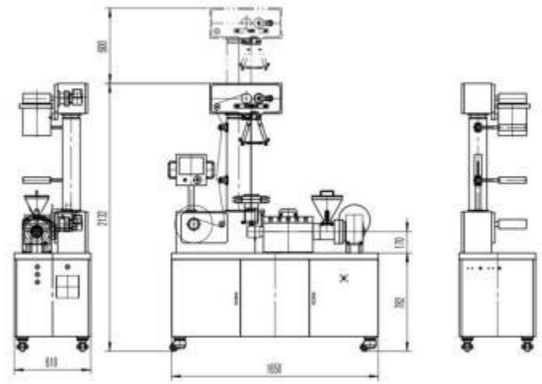

FEATURES

- Driven by servo motors, stepless precision speed regulation, stable plasticization and good consistency.
- Special gearbox of high-strength servo motor for excellent cooling e ect.
- Electric lifting membrane frame, traction roller is cantilever structure, convenient for film leading and process adjustment.
- Equipped with blown film frame expansion device for easy transportation and movement.
- Vector ring, energy-saving, low noise.
- High-strength European-standard integrated rack with aesthetic design. Easy to operate, light and compact.
- 304 stainless steel desktop.
- Computer-based measurement and control system with user-friendly operation interface.
- Real-time measurement and graphic display of important data such as extrusion system, easy to observe.
- Emergency stop device and protective measures for operator's safety.

APPLICATION

- New material formulation development
- Material blown film performance test
- Masterbatch dispersion performance test
- Optimization of process parameters for blown film production
- Preparation of a single-layer blown tubular film
- Studying the blown film forming performance of materials
- Studying the dispersion performance of pigments

PERFORMANCE SPECIFICATION

Model	FBSI-20/28
Applicable materials	PE 、POF 、PVC etc.
Screw diameter	25mm
Dia	20mm
L/D	28
Screw speed	0-100rpm
Max. lay flat width	120mm
Product specification	0.02-0.1mm
Roller width	220mm
Line speed	0-10m/min
Pressure measurement range/accuracy	0-50MPa, 0.5%F.S
Heating/cooling method	Electric heating/Fan cooling
Operating temperature	Room temperature-350°C
Temperature control accuracy	±1°C
Main output	5kg/h
Main motor power	3kW
Control	SIEMENS PLC
Working voltage	Three-phase 380VAC±10%,Single-phase 220VAC±10%,50Hz
Rated power	Approx.9kW
L x W x H	1650mm×610mm×2135mm
Weight	Approx.550kg

Desktop Casting Machine



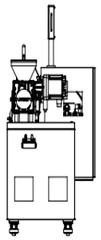

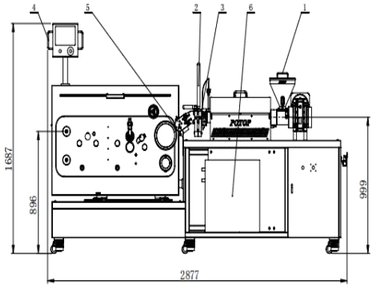

FEATURES

●High strength European standard integrated rack, 304 stainless steel desktop, practical and beautiful
●Special gearbox of high-strength servo motor for excellent cooling effect.
●The power rollers are independently driven by servo motor, the roller speed is controlled accurately, and the synchronization performance is good.
● the height of casting roll can be adjusted up and down to meet the process requirements of casting materials with different solution strength.
●Hard chrome plated mirror roller with 304 stainless steel roller core, high surface finish and no rust·
●Brand PLC touch screen, convenient and intelligent control.
● Built in circulating water cooling, precise control of casting roll temperature.
● Optional air knife or electrostatic adsorber to improve the adsorption effect of solution and roller surface.
● Optional waste edge collection device to facilitate waste recycling.
● Optional constant tension winding device to improve film winding quality.
● Pattern roller / fog roller can be selected to achieve different film surface treatment.
● Humanized structure design, more convenient operation.

APPLICATION

●Experiment on casting of polymer materials.
● Casting production process research and parameter optimization.
● Casting performance test of new materials.
●Dispersion performance test and evaluation of Color Masterbatch.

PERFORMANCE SPECIFICATION

Model	FDSI-25/28
Applicable materials	PE、PP etc
Screw diameter	25mm
L/D	28
Screw speed	0-120rpm
Die width	200mm
Product width	0-180mm
Product thickness	0.02-0.3mm
Temperature control accuracy	±1°C
Pressure measurement range/accuracy	0-50MPa, 0.5%F.S
Operating temperature	350°C
Temperature control accuracy	±1°C
Max.output	3kg/h
Main motor power	3kW
Control	SIEMENS PLC
Working voltage	Three-phase 380VAC±10%,Single-phase 220VAC±10%,50Hz
Rated power	Approx.10kW
L x W x W	2105mm×860mm×1585mm
Weight	Approx.600kg

Standard Machines

Desktop Three-roll Calender

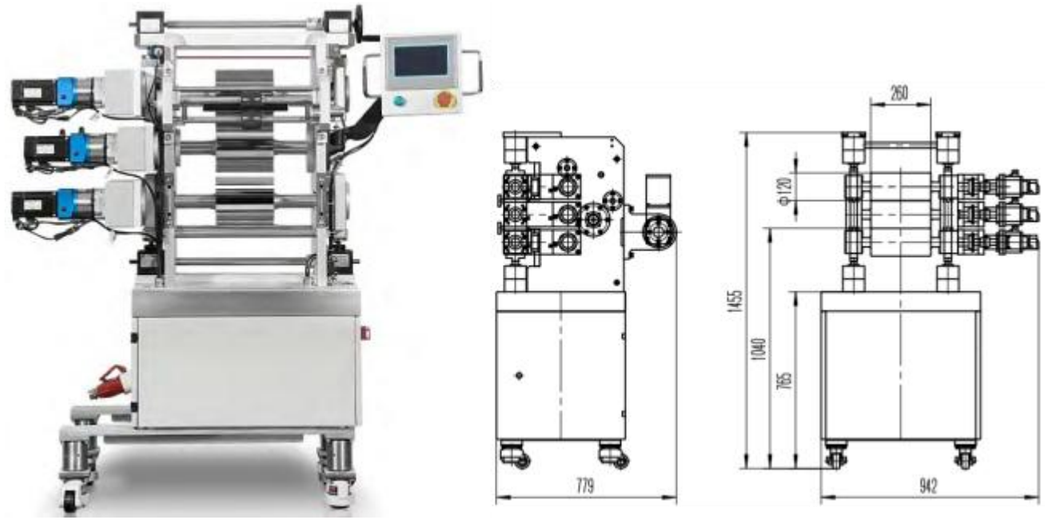

FEATURES

- High-strength European standard integrated frame with aesthetic design.
- The power rollers are independently driven by servo motor, the roller speed is controlled accurately, and the synchronization performance is good.
- Hard chrome mirror roll with 304 stainless steel roll core, high surface finish and no rust.
- High-quality and intelligent PLC touch screen, easy to operate.
- Optional waste collection device for waste recycling.
- Optional constant tension winding device for improved film winding quality.
- Optional pattern roll / matte roll for di erent film finishes.
- Humanized structure design, more convenient operation.

APPLICATION

- Rubber/plastic mixing and dispersion of components
- Plasticization and mixing of rubber and plastic
- Formulation design of rubber and plastic
- Rubber and plastic sheet preparation
- Surface treatment of rubber and plastic sheets
- Optimization and control of rubber calendering process parameters
- Optional embossing roller / matte roller for a variety of surface treatment of rubber sheets

PERFORMANCE SPECIFICATION

Model	LPDI-16/35
Applicable materials	PE/PP/PS/PET/PC/PVDF/PVB/EVA and composite materials
Product width	0-180mm
Product thickness	0.2-2.0mm
Roller spacing adjustment range	0-5mm
Roller width	260mm
Line speed	0-10m/min
Heating/cooling method	Electric or oil heating/water cooling
Operating temperature	5-250°C
Temperature control accuracy	±2°C
Main motor power	0.75kW
Control	SIEMENS PLC
Working voltage	Three-phase 380VAC±10%,Single-phase 220VAC±10%,50Hz
Rated power	Approx.10kW
L x W x H	945mm×780mm×1455mm
Weight	Approx.700kg

Laminating & Coating Extrusion Test Line



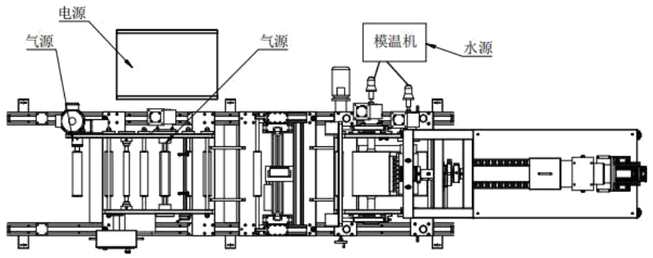

FEATURES

- Integrate film casting, laminating, trimming, rolling and rolling in one machine.
- This machine can produce cast film extrusion laminating.
- Cast film extrusion, laminating film forming, or both of these two processes are going on at the same time.
- Co-extrusion casting & coating & laminating forming process Otptional.
- The roller is driven independently by servo motor for best speed control precision, synchronization performance.
- Casting roller height can be adjusted to meet the different melt strength casting process needs.
- Hard chrome mirror roller with 304 stainless steel roller core, high surface finish, no rust.

APPLICATION

- Machine size and application functions can be customized.
- Polymer film casting laminating and composite test.
- Cast film extrusion laminating production process research and parameter optimization.
- New material cast ability test
- Color Master batch dispersion performance test evaluation.
- Small batch production of narrow width cast film

PERFORMANCE SPECIFICATION

Model	FLSL-22
Applicable materials	PP / PE / PLA etc.
Screw diameter	25mm
Extrusion diameter	45mm
L/D	28
Die width	200mm
Product thickness	0.02-0.2mm
Linear speed	0-10m /min
Roll surface temperature range	Rt-100°C
Temperature control accuracy	±1°C
Control	SIEMENS PLC
Working voltage	Three-phase 380VAC±10%,Single-phase 220VAC±10%,50Hz

Standard Machines

Tube Extrusion Molding Experimental Line





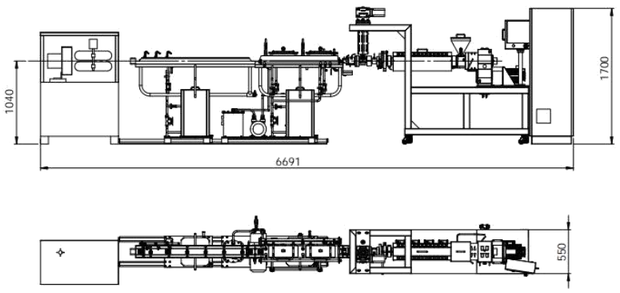

FEATURES

- The extruder is driven by servo driver, which has the advantages of high reliability, wide speed regulation range and stable operation.
- Digital display of host and traction control.
- PLC control and display system, stable and reliable.
- The high-precision sensor parts improve the processing process control accuracy.
- High precision extrusion screw, barrel and mold manufacturing process can ensure that the dimensional tolerance of products reaches ± 0.05mm.

APPLICATION

- Suitable for extrusion molding of PE, PP, PC, PLA, ABS, EVA, TPU, TPU and other plastic materials and pipes.
- Used for extruding single / multi cavity and multi specification plastic pipes.
- Formula design of plastic pipe.
- Optimization and control of plastic pipe extrusion process parameters.

PERFORMANCE SPECIFICATION

Model	SESL-25
Screw diameter	Φ 25mm
Applicable materials	PE、PP、PLA、TPU etc.
L/D	28
Maximum screw speed	120rpm
Rated power of screw motor	5.5kw
Rated speed of screw motor	1500rpm
Operating temperature	350°C
Temperature control accuracy	±1°C
Control	SIEMENS PLC
Working voltage	Three-phase 380VAC±10%,Single-phase 220VAC±10%,50Hz
Large output	About 5kg / h

MDO Stretching Machine



FEATURES

- Wide applicability of the equipment, fast stretching and continuous adjustment of the distance between slow rolls
- The temperature of each roller group is controlled independently, and each roller is driven independently and can be adjusted steplessly to meet the requirements of PE, PP, PVDF and other plastic films
- In addition, a film introduction channel is arranged on the front vertical plate along the roll surface, which makes it convenient to start the film introduction.
- This equipment is used together with the flow certificate machine to realize the online stretching of plastic film

APPLICATION

- For production quality control, scientific research and other fields
- Test the dispersion of filler in polymer
- Check whether the raw materials are qualified.
- Its biggest advantage is that it can be tested under conditions close to actual processing. During the test, the frequency, voltage, current and other parameters will be displayed in real time in digital form for user reference

PERFORMANCE SPECIFICATION

Stretch point	1 or 2
Applicable materials	PE, PP, PD, etc.
Drawing speed ratio	10:1
Roll surface width	350mm
Film inlet width	250mm
Maximum rotating speed of moving stretching roller	25m/min
Heating Method	Oil,Electric Heating Rod
Purpose	Stretch training
Forming method	Stretch forming
Control	SIEMENS PLC
Working voltage	Three-phase 380VAC±10%,Single-phase 220VAC±10%,50Hz

Laboratory Film Biaxial Stretching Machine



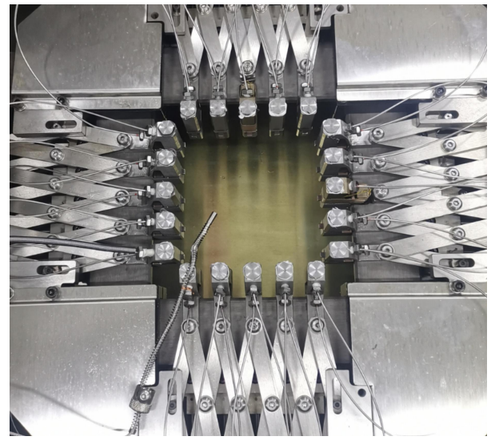

FEATURES

- Unidirectional restricted, unidirectional unrestricted, bidirectional synchronous, bidirectional asynchronous and other stretching methods
- The stretching ratio in the vertical and horizontal directions is adjustable, and the maximum stretching ratio is 10:1
- The stretching speed in the vertical and horizontal directions is adjustable, and the fastest stretching speed is ~ 0.5m/s
- The maximum temperature can reach 250 ℃, and the temperature control accuracy is ± 1.5 ℃

APPLICATION

- Research and development of new products applied to high-end film field
- It is used in the laboratory to test and analyze the physical and chemical properties of new material film forming, and to design
- High-end film formulations
- Process research and parameter optimization

PERFORMANCE SPECIFICATION

MODEL	FOCI-10	FOCI-05	FOCI-04S
Applicable materials	PP，PE ,PET, PVDF，PTFE etc.		
Sample thickness	0.1mm - 2mm Pneumatic clamp/0.2-1mm Manual clamp		
Minimum sample size	95mm×95mm		80×80mm
Maximum sample size	110mm×110mm		100×100mm
Speed precision	0.01 mm/s		
Speed mode	Constant rate of change (high)/constant rate (simple)		
Stretching force	2000N	1000N	1000N
Extension ratio	10: 1	5:	4：1
Size of the stretching mechanism	1600 × 1600 × 225 mm（L x W x H）	870×870×175 mm（L x W x H）	720×720×175 mm (L x W x H）
Drive way	Servo motor		
The highest temperature	250℃		
Weight	＜2800kg	＜1200kg	＜700kg
Outline dimension	4400x2300x1900mm	2900×1400×1700mm	1800×1000×1650mm

Small Two Roll Mill



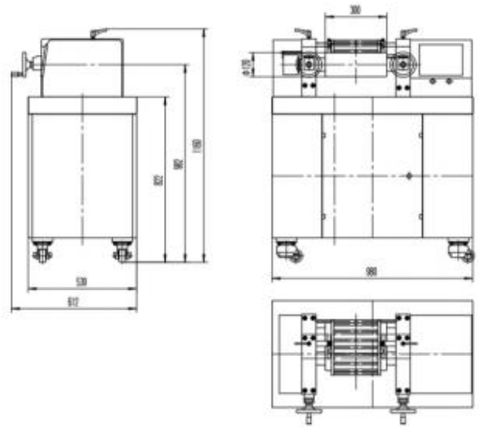

FEATURES

- Driven by servo motors, stepless precision speed regulation, good consistency.
- Hard chrome mirror calender roll with 304 stainless steel roll core, reliable quality with high surface finish.
- Electrical heating/oil heating can be selected according to process requirements.
- Two-roller spacing is manually adjustable, with mechanical scale.
- High-strength European standard integrated frame with aesthetic design, light and durable.
- 304 stainless steel desktop.
- Computer-based measurement and control system with user-friendly operation interface.
- Real-time measurement and graphic display of important data for observation.
- Emergency stop device and protective measures for operator's safety.

APPLICATION

- Formulation design of rubber and plastic
- Mixing, mastication of rubber and plastic
- Rubber mixing, vulcanization reaction
- Forming of common rubbers by extrusion and calendering
- Preparation of rubber and plastic sheets
- Surface treatment of plastic sheets
- Optimization and control of rubber process parameters

PERFORMANCE SPECIFICATION

Model	FPHU-300
Applicable materials	Rubber, PVC etc.
Mixing capacity	0.2—0.5kg each time
Thickness of sheet	0.2-2mm
Width of sheet	0-250mm
Roller diameter	120mm
Heating method	Electric or oil heating
Working temperature	Room temperature-250°C
Temperature control accuracy	±1°C
Motor power	0.75kW
Control	SIEMENS PLC
Working voltage	Three-phase 380VAC±10%,single-phase 220VAC±10%,50Hz
Rated power	Approx.9kW
L x W x H	980mm×615mm×1160mm
Weight	Approx.300kg

Platen Vulcanizer (High Temperature Vacuum)



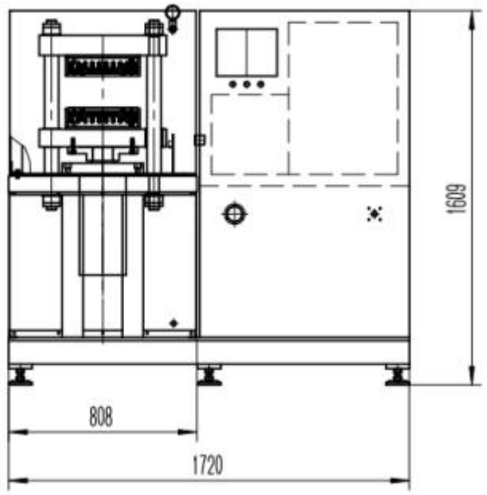

FEATURES

- High pressure control accuracy.
- High strength stainless steel press platen.
- Electric heating and PID temperature control mode, heating fast and high temperature control accuracy.
- The forming time is arbitrarily adjustable.
- High-strength European standard integrated frame with aesthetic design, light and durable.
- Computer-based measurement and control system with user-friendly operation interface.
- Emergency stop device and protective measures for operator's safety.

APPLICATION

- Formulation design of rubber and plastic.
- Heating and pressure vulcanization of common rubber.
- Preparation of simple rubber vulcanized products.
- Preparation of products by simple thermoset materials.
- Hot press forming of common rubber, plastic and composite materials.
- Study on the vulcanization process of common rubber materials.
- Optimization and control of rubber vulcanization process parameters.

PERFORMANCE SPECIFICATION

Model	LSVI-50
Applicable materials	Rubber, plastic etc.
Clamping force	50tons (adjustable within 30MPa)
Max. operating temperature	450°C
Temperature control accuracy	±2°C
Heating/ cooling method	Electric heating/ compressed air or water cooling
Press platen size	300mm×300mm×60mm
Press platen spacing	150mm
Work layer	Single-layer, two-platen
Gradient pressurization	2 sections
Exhaust	0-10 times(adjustable)
Cylinder speed	11-50mm/s
Pressure measurement range/accuracy	0-60MPa, 0.5%F.S
Oil pump motor power	3.7kW
Vacuum pump motor power	1.5kW
Vacuum degree	<10mbar (Above sea level)
Control	SIEMENS PLC
Working voltage	Three-phase 380VAC±10%, Single-phase 220VAC±10%, 50Hz
Rated power	Approx.14kW
L x W x H	1720mm×670mm×1610mm
Weight	Approx.1000kg

Platen Vulcanizer



FEATURES

- High pressure control accuracy.
- High strength stainless steel press platen.
- Electric heating and PID temperature control mode, heating fast and high temperature control accuracy.
- The forming time is arbitrarily adjustable.
- High-strength European standard integrated frame with aesthetic design, light and durable.
- Computer-based measurement and control system with user-friendly operation interface.
- Emergency stop device and protective measures for operator's safety

FEATURES

- Formulation design of rubber and plastic.
- Heating and pressure vulcanization of common rubber.
- Preparation of simple rubber vulcanized products.
- Preparation of products by simple thermoset materials.
- Hot press forming of common rubber, plastic and composite materials.
- Study on the vulcanization process of common rubber materials.
- Optimization and control of rubber vulcanization process parameters.

PERFORMANCE SPECIFICATION

Model	LSVI-25
Applicable materials	Rubber, plastic etc.
Clamping force	25 tons (adjustable within 18MPa)
Max. operating temperature	300°C
Temperature control accuracy	±3°C
Heating/cooling method	Electric heating/water cooling
Press platen size	300mm×300mm×60mm
Press platen spacing	150mm
Work layer	Single-layer, two-platen
Gradient pressurization	2 sections
Exhaust	0-10 times(adjustable)
Cylinder speed	11-50mm/s
Pressure measurement range/accuracy	0-30MPa, 0.5%F.S
Main motor power	2.2kW
Control	SIEMENS PLC
Working voltage	Three-phase 380VAC±10%,Single-phase 220VAC±10%,50Hz
Rated power	Approx.8kW
L x W x H	950mm×500mm×1470mm
Weight	Approx.815kg

Modularized Dynamic Rheological Workstation



Overview

Advanced technologies such as precision machinery, sensors, automation, polymer science & engineering and software are integrated into the polymer dynamic rheological workstation. With modular design, simple and compact structure, each functional module can be easily combined with other modules to constitute a variety of small production lines or test platforms.

Main Test & Control Module



FEATURES

- High-precision servo motor used for driving.
- The control system adopts advanced OPC technology to realize various operations on the instrument on an independent computer.
- Labview-based data analysis software, powerful and user-friendly.

APPLICATION

- As an operation and monitoring platform of polymer dynamic rheological workstation, it is used together with other modules.
- The driving force with measurement and control functions for other modules.
- Complete the recording of experimental data and secondary processing.

PERFORMANCE SPECIFICATION

Model	RMOM-75
Rotating speed	0-360rpm
Rotating speed control accuracy	0.5% F.S
Max. torque	198Nm
Pressure measurement range	0-100MPa
Pressure measurement accuracy	0.5 % F.S
Main motor power	7.5kW
Control	SIEMENS PLC
Working voltage	Three-phase 380VAC±10% , single-phase 220VAC±10% , 50Hz
Rated power	Approx.8kw
L x W x H	1120mm×690mm×1300mm
Weight	400kg

Torque Module



FEATURES

- The test conditions are close to the actual processing of the material
- Optimized heater structure and cooling duct design for more precise temperature control.
- Modular design, easy to operate, disassemble and clean.
- Reliable electronic overload protection for safety.
- German ETH non-contact high-precision dynamic torque sensor for accurate and repeatable

APPLICATION

- Formulation design
- Inspection for quality of raw materials
- Test for PVC melting characteristics
- Test for plasticizer absorption of PVC dry mix
- Test for thermal/shear stability of materials
- Determination of cross-linking properties of XLPE cross-linked polyethylene

PERFORMANCE SPECIFICATION

Model	RTOM-55/20
Mixing chamber volume	55mL
Rotating speed	0-200rpm
Rotor speed ratio	2:3
Rotor	Equipped with Roller (Options:Banbury 、Cam、Sigma、Delte)
Torque measurement range	0-200Nm
Torque measurement accuracy	0.5%F.S
Heating/cooling method	Electric heating/compressed air cooling
Operating temperature	Room temperature-350°C
Temperature control accuracy	±1°C
Rated power	3kW
L x W x H	840mm×690mm×1300mm
Weight	300kg

Capillary Extrusion Module

FEATURES

- The module includes precision single screw extruder, capillary mold, die and online weighing device.
- High precision pressure sensor
- The online weighing device is connected to the control system to monitor the change of extrudate quality in real time.
- Plasticizing and extrusion of di erent materials by optional screws with di erent structure.
- Precision single-screw extruder provides a well-plasticized and stabilized extrusion stream in capillary rheology testing.



APPLICATION

- Test for capillary rheological performance in extrusion of polymer materials
- Analysis for extrusion shear behavior of polymer materials
- Evaluation of processing performance of polymer materials
- Inspection for quality of polymer mater

PERFORMANCE SPECIFICATION

Model	RCSM-20/28
Screw diameter	20mm
L/D	28
Screw speed	0- 100rpm
Capillary die diameter	1mm、2mm
Capillary die L/D	1mm：10、20、30、40；2mm：10、20
Pressure measurement range	0-50MPa
Pressure measurement accuracy	0 .5%F.S
Weighing range	0-4100g
Weighing accuracy	±0 . 1g
Heating/cooling method	Electric heating/ Fan cooling
Operating temperature	Room temperature-350°C
Temperature control accuracy	±1°C
Control	SIEMENS PLC
Working voltage	Three- phase 380VAC±10%， Single- phase 220VAC±10%， 50Hz
Rated power	Approx .6kW
L x W x H	860mm×690mm×1270mm
Weight	Approx .350kg